IOTAFLOW
SYSTEMS PVT. LTD

Model VN

" if you want to manage it Measure it "

Compact Electromagnetic Flow Sensor

- **No moving parts, No pressure loss, Excellent durability**
- **Compact design, Easy to install**
- **No straight pipe required**

Possible to measure, even though there are foreign materials in fluid, and even though there is no straight pipe portion. Also possible to measure flow of disinfection fluids. Therefore, it is the most suitable for measurement of installation at various factory production lines and built-in machines.

www.iotaflow.com

Specifications In addition, for the special specification, please contact us.

Model			VN05	VN10	VN20
Guarantee-flow rate accuracy range (Minimum flow rate to Maximum flow rate)			0.05~1L/min	0.5~10L/min	3.0~60L/min
Maximum operating flow rate			3L/min	25L/min	100L/min
Low flow cutoff			0.025L/min	0.25L/min	1.5L/min
Accuracy (Liquid temperature at 25°C)	Frequency pulse		±2.5RS% (100 to 20% of maximum flow rate) ±0.5FS% (20 to 5% of maximum flow rate)		
	Unit pulse		±2.0RS% (100 to 20% of maximum flow rate) ±0.4FS% (20 to 5% of maximum flow rate)		
Piping connection (Thread size)			R1/4	R1/2	R1
Fluid temperature range			0 to 60°C (No freezing)		
Fluid conductivity rate			50μ S/cm or more		
Type of liquid			Conductive liquid that dose not corrode the material contacting to liquid		
Working pressure			1 MPa or less		
Pressure loss			0.02MPa or less		
Ambient temperature/humidity			Temperature: -20°C to 60°C Humidity: 35% to 85%RH (No condensation)		
Responsiveness			63% response Damping time: 2s (Standard)		
Signal cable			Length: 0.5m 4core Red: Power supply + wire White: Output 1 Blue: GND Yellow: Output 2		
LED display			One LED display in the main body Green: Flow rate display Display in three-step speed Red: NG status is displayed with number of blinks		
Installation position			Free (Vertical piping is recommended)		
Common specification of output			NPN Open collector Current capacity; 20mA or less Voltage: 30VDC or less Residual voltage at turning ON: 1 V or less		
Output 1 *2	Frequency pulse *1	Duty ratio: 50%	Standard 200Hz (Settable in steps of 0.1Hz between 20 and 400Hz)		
	Unit pulse		0.001L/P(Standard)	0.01L/P(Standard)	0.1L/P(Standard)
	Alarm *3		Selectable between Normal Open (Standard) and Normal Close Details of alarm (Low source voltage/Meter error/Dry moisture/ Excessive flow rate/Excessive liquid noise/Reverse-flow)		
	Switch *4		Selectable between Normal Open (Standard) and Normal Close Level judgment value: Settable in steps of 1% from 0 to 100%. (Convert the maximum flow rate 100%)		
Output 2 *2	Unit pulse		The same as output 1		
	Alarm *3		The same as output 1		
	Switch *4		The same as output 1		
Protection level			IPX4 (Equivalent to IP64)		
Consumption current			100mA or less		
Power supply			12-24 VDC (± 10%) We recommend the power supply is supplied with isolated power supply and 1 unit of power supply is connected to one unit of VN		
Wetted materials			Main body: PPS resin Electrode: SUS316L O-ring: FKM Earth ring: SUS316		

*1: Frequency at maximum flow rate
*2: For the set value and choice of Output 1 and Output 2, all are factory setting, and setting change after installation is not available.
*3: Alarm is selectable only either one of Output 1 or Output 2.
*4: For the window judgment, Output 1 and Output 2 are used.
(Note) CE mark certification for lightening surge has not obtained.

Accuracy

Flow rate range

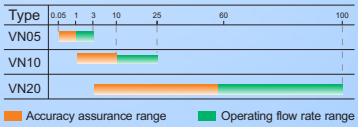

External dimensions

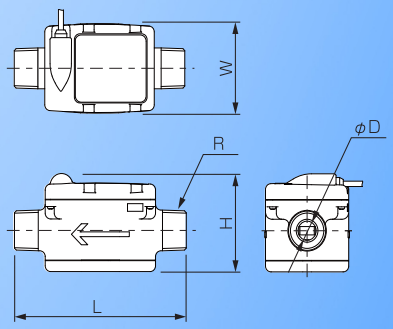

Unit: mm

Model	VN05	VN10	VN20
L	85	95	110
W	47	47	49
H	49	52	62
øD	5.2	10	20
R	1/4	1 /2	1

Wiring diagram (As to the wiring technique of attached cord)

Please set the sink current for open collector output of output 1 and output 2 to 20mA or less. For your reference, the recommendation for pull-up resistor becomes [10 to 20kΩ]

Sink current calculation formula

$$Is = \frac{V}{R} \leqq 20\ [mA]$$

V: Power supply (V)
R: Pull-up resistor (Ω)

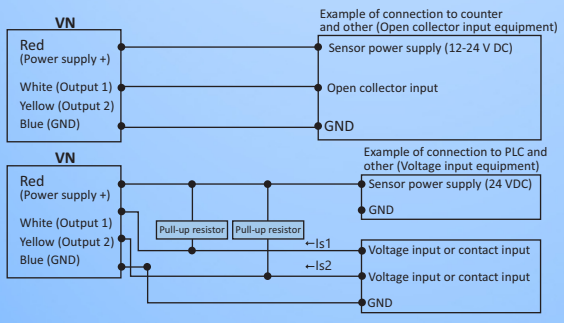

Contact Us
IOTAFLOW SYSTEMS PVT. LTD.

C-2/13, Mayapuri Industrial Area Phase-II,
New Delhi - 110064 (INDIA)

+91-9910693866/ +91-97790 85987

contact@iotaflow.com

Specifications subject to change without prior notice. © Iotaflow Systems Pvt. Ltd.